DS42-430BL14

NEOMOUNTS DS42-430BL14 TV STAND 32-55"-

SPECIFICATIONS

GENERAL

Min. screen size*	32 inch
Max. screen size*	55 inch
Max. weight	50 kg (per screen)
Screens	1
VESA minimum	100x100 mm
VESA maximum	400x400 mm
Desk mount	Bolt-down

FUNCTIONALITY

Type	Swivel
Lockable	Not lockable
Swivel (degrees)	+30°. -30°
Height	62.7 cm
Width	53.4 cm
Depth	12.5 cm

INFORMATION

Color	Black
Main material	Steel
Warranty	5 year
EAN code	8717371445355

*Please note: The inch sizes stated are just an indication, combined with the weight and VESA sizes. The maximum weight and VESA size are absolute restrictions for the products and should not be exceeded.

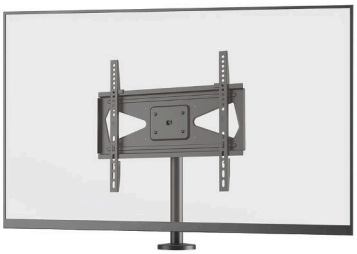

Neomounts

Neomounts

Neomounts DS42-430BL14 TV stand 1 screen - 32-55" - 0-50 kg - VESA 100x100-400x400 - bolt-down - 60° swivel - black

The Neomounts DS42-430BL14 is a bolt-down TV desk mount for screens up to 55" with a weight capacity of 50 kg. The TV mount features a practical swivel option (60°) to easily position the TV in the optimum viewing angle.

The DS42-430BL14 is suitable for screens that meet pattern 100x100 to 400x400 mm. For non-standard hole patterns, Neomounts has various VESA optional adapter plates available. Cables can be routed neatly through the rod and table top thanks to the internal cable management. The bolt down base ensures solid installation of the mount to the desk.

Neomounts®

DS42-430BL14 **NEOMOUNTS DS42-430BL14 TV STAND 32-55"-**

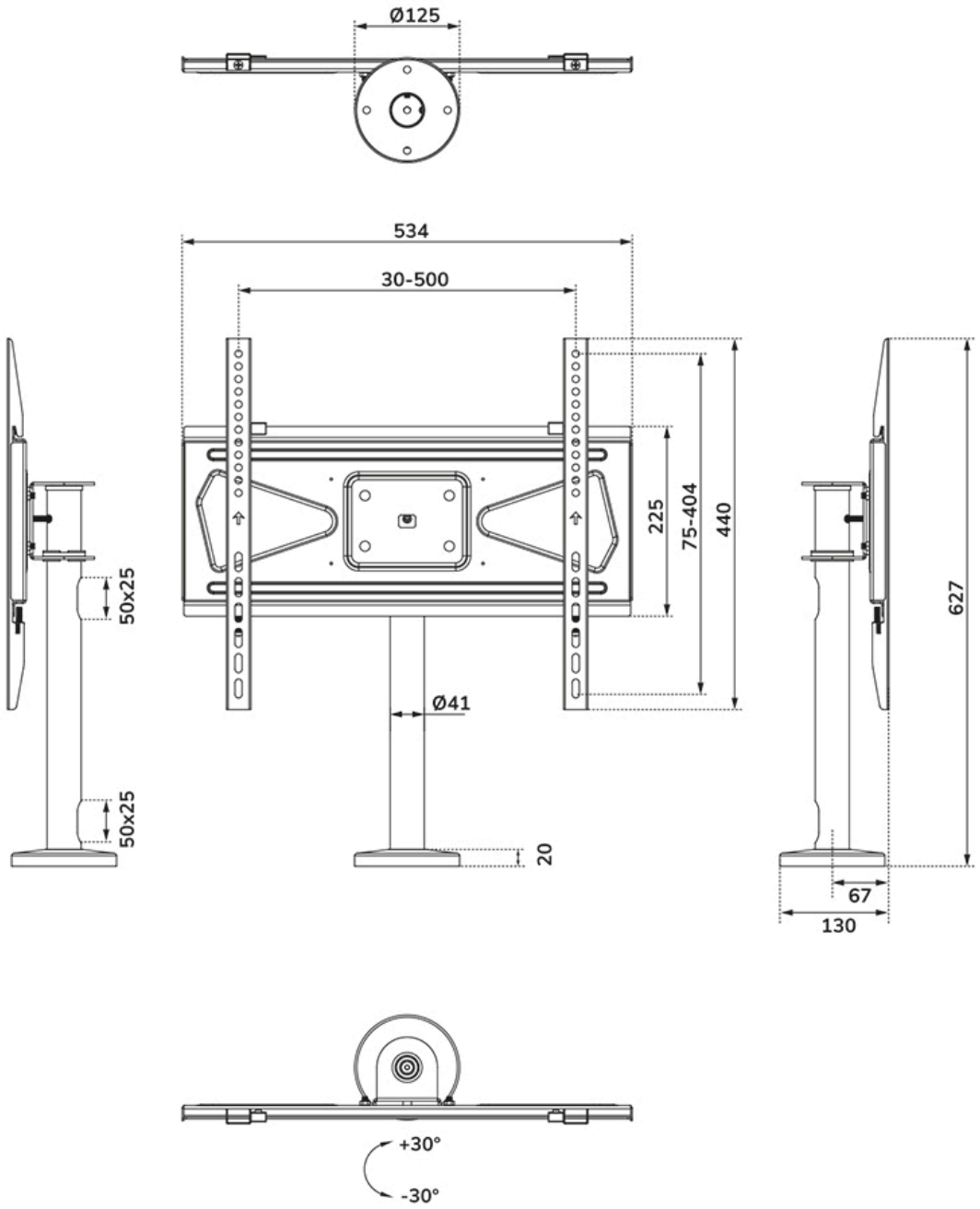

Neomounts

Measuring unit: mm