tp-link | tapo

User Guide

Solar-Powered Security Camera Kit

©2024 TP-Link 1910013673 REV1.0.0

Contents

About This Guide 1

Introduction 2

Appearance 3

Charge the Battery 5

Set Up Your Camera 6

Set Up Using Amazon Frustration-Free Setup 7

Mounting Tips - Camera 11

Mounting Tips - Solar Panel 12

Mount Solar Panel and Camera KIT 13

Mount Your Camera Only 15

Authentication 16

About This Guide

This guide provides a brief introduction to the Solar-Powered Security Camera Kit and the Tapo app, as well as regulatory information.

Please note that features available in Tapo may vary by model and software version. Tapo availability may also vary by region. All images, steps, and descriptions in this guide are only examples and may not reflect your actual Tapo Camera experience.

Conventions

In this guide, the following convention is used:

Convention	Description
Blue	Key information appears in blue, including management page text such as menus, items, buttons and so on.
Underline	Hyperlinks are in blue and underlined. You can click to redirect to a website.
Note:	Ignoring this type of note might result in a malfunction or damage to the device.

More Info

- Specifications can be found on the product page at https://www.tapo.com.
- Our Technical Support and troubleshooting information can be found at https://www.tapo.com/support/.
- Setup and mounting videos can be found at https://www.tp-link.com/support/setup-video/#cloud-cameras.

Introduction

Tapo solar panel's innovative design allows for versatile setup options. Combine into one sleek unit for a neater appearance, or connect via a 4-meter cable to maximize sun exposure.

High-Efficiency Solar Charging

Just 45 minutes* of sunlight daily powers Tapo camera all day. Its battery lasts up to 300 days.**

2K QHD Live View

Now with 1.7× more pixels than 1080p, providing clearer videos and more crisp photos.***

Local§ and Cloud△ Storage

Save recorded video on a microSD card (up to 512 GB).§ No subscription required.

150° Super-Wide FOV

Expands your surveillance coverage, ensuring more security for vital areas.

Color Night Vision

Enhances your security by revealing vivid colors with built-in spotlights and starlight sensor.

Customizable Sound and Light Alarm

Record your own audio as an alarm and adjust the brightness of dual spotlights for your customized use.

Free Person/Pet/Vehicle Detection

Smart AI identifies people, pets, and vehicles, reducing false alerts and unnecessary notifications, which also extends battery life.

Activity Zones

Customize detection zones for focused alerts that matter.

IP66 Weatherproof for Camera

Performs well even in harsh environments with rain and dust, ideal for outdoor scenarios.

*45 min of sunlight time is based on standard environmental conditions (1000W/m2, 25°C, AM1.5) and specified working scenes (up to 100 events triggered per day). Actual required time of sunlight may vary.
**300-day battery life is based on Tapo laboratory tests with 230s of use per day. Increased usage of 360s per day reduces battery life to 180 days. The time of use includes recording and watching live views. Actual battery life may vary due to device settings, usage, router specifications, and environmental factors.
****Compatible with Alexa and Google Assistant supported displays. User experience is dependent on the connected device's specifications.
§microSD card purchased separately. Actual storage capacity depends on the size of the microSD card used.
△Subscribe for cloud storage at https://www.tapo.com/tapocare/

Appearance

Front

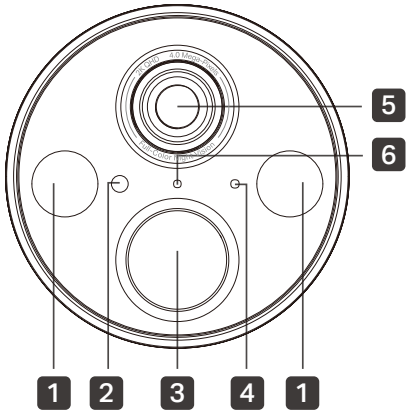

Side

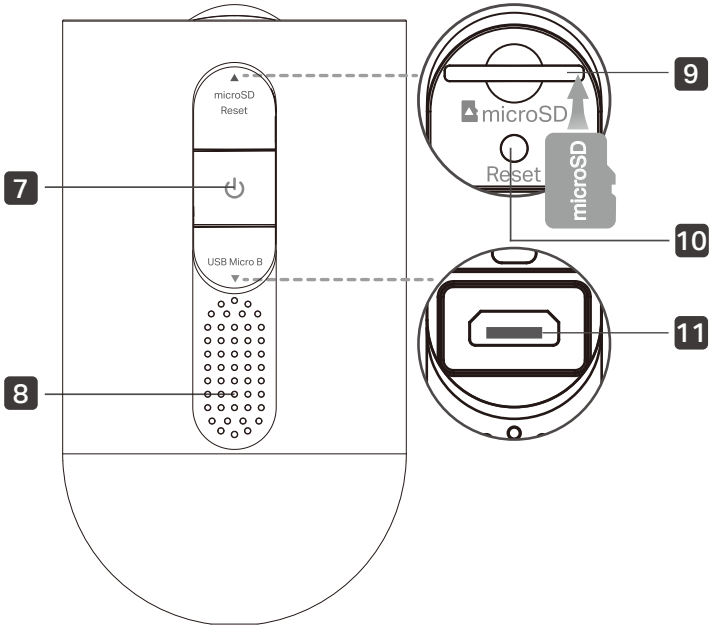

1 Spotlights

2 Light Sensor

3 Motion Sensor

4 Microphone

5 Lens

6 Status LED

7 Power Button ⏻

Press and hold for about 3 seconds to turn on/off the camera.

8 Speaker

9 microSD Card Slot

Open the cover. Insert a microSD card* and initialize it on the Tapo app for local recording.

*microSD card not included.

10 Reset Button

Open the cover. Use a pin to press and hold for at least 5 seconds to reset the camera to factory default settings.

11 USB Micro B Charging Port

Open the cover for USB charging.

Status LED Indication

Blinking amber quickly for 3 seconds	Plugging in USB charger
Solid red	Starting up
Blinking red and green	Ready for setup
Blinking red slowly	Connecting to Wi-Fi
Solid amber	Connected to Wi-Fi
Solid green	Connected to the cloud
Blinking red quickly	Camera resetting
Blinking green quickly	Camera updating

Charge the Battery

The battery comes partially charged. We recommend that you fully charge the battery before use. This will take about **five and a half hours**.

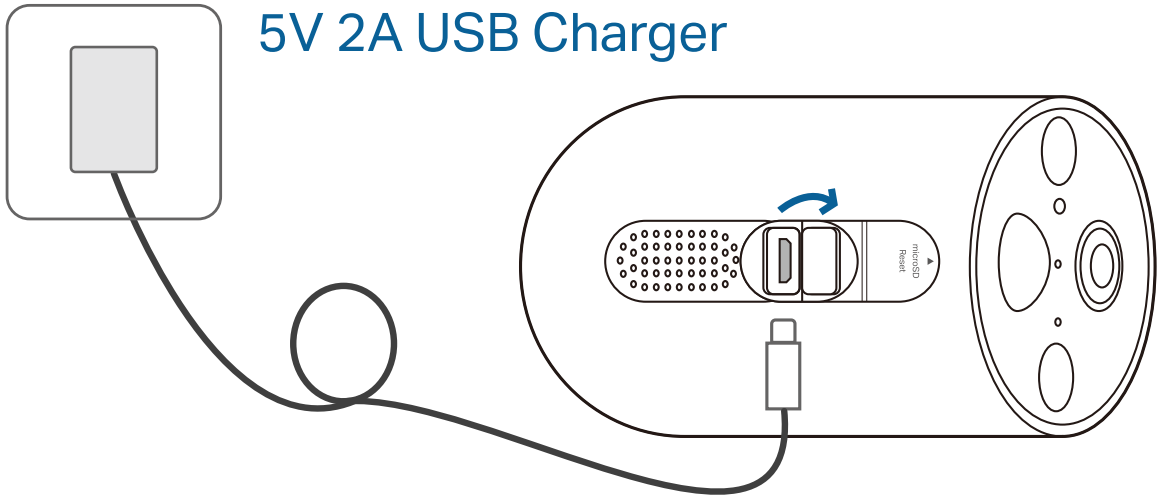

Note:

1. Peel off film from the camera before use.
2. Warning: Do not tear off the silicone part by force as it may affect the waterproof performance.
3. When you plug in the USB charger (not provided), the LED should blink amber quickly for 3 seconds. If not, make sure the power is running and check your connection.
4. Charge the battery using the USB cable included in the package. Inappropriate cables may result in slow charging or failure to charge.
5. Keep the ports firmly covered when not in use to ensure waterproof performance.
6. Check the battery status in the Tapo app after setup.

Set Up Your Camera

Follow the steps below to set up your camera. For the setup video, please refer to https://www.tp-link.com/support/setup-video/#cloud-cameras.

Step 1. Download Tapo App

Get the Tapo app from the App Store or Google Play, or by scanning the QR code below.

Download on the App Store

GET IT ON Google Play

OR

Step 2. Log In

Open the app, and log in with your TP-Link ID. If you don't have an account, create one first.

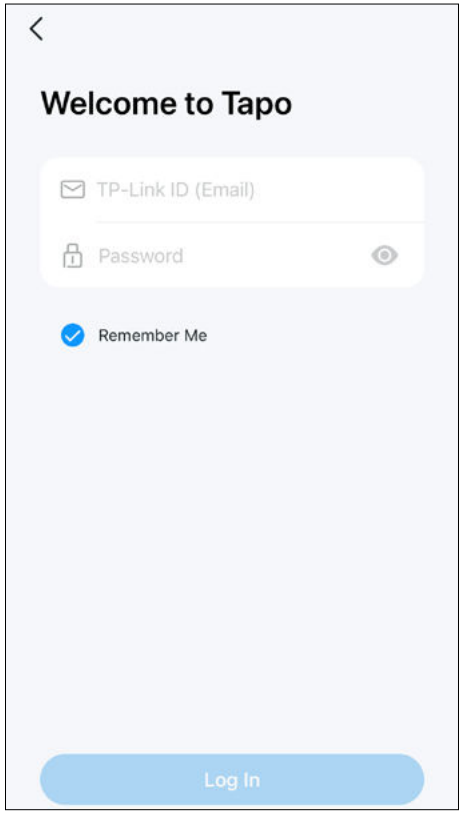

Step 3. Add Your Camera

Tap the ⊕ button in the app and select your model. Follow app instructions to complete the setup.

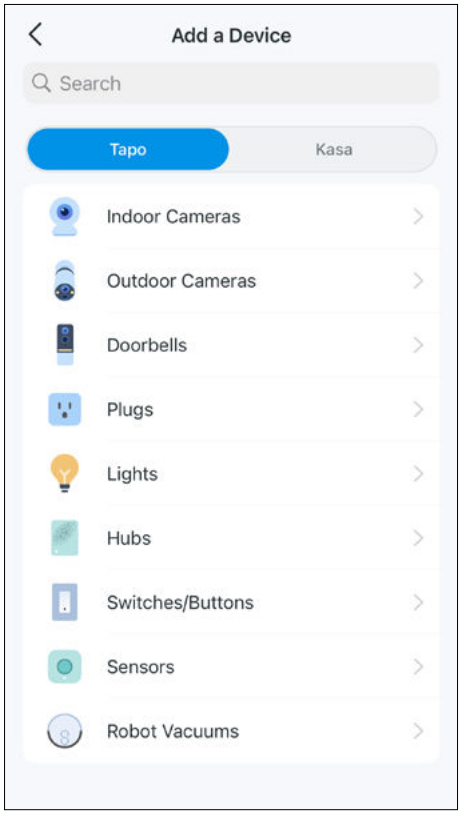

Set Up Using Amazon Frustration-Free Setup

Note: Amazon Frustration-Free Setup is only available for Tapo C425. TC85 doesn't support Amazon Frustration-Free Setup.

What is Amazon Frustration-Free Setup?

Amazon Frustration-Free Setup can help connect and set up Tapo smart devices in fewer steps, without having to remember and re-enter your Wi-Fi password on each device.

To use this feature, confirm the following:

- The new Tapo device supports Amazon FFS.
- The new Tapo device is purchased from Amazon.
- You have an Amazon FFS enabled Alexa device or router.
- You have saved your Wi-Fi information to Amazon by using Alexa echo.
- Your Tapo device and router are on the same network as your Alexa echo.

LED Indications during Amazon Frustration-Free Setup

LED	Status
Blinking red and green	Ready for setup
Blinking amber	FFS setup in progress
Solid green	Working properly

If the LED does not turn solid green after a long time, you can try to add the Tapo device manually. (Press the Reset button on your Tapo device once. Then open the Tapo app, tap the + button on the page, select your device model, and follow the app instructions.)

How to use Amazon Frustration-Free Setup with Tapo devices

1. Open the Amazon Alexa app. Then tap More and select Skills & Games.

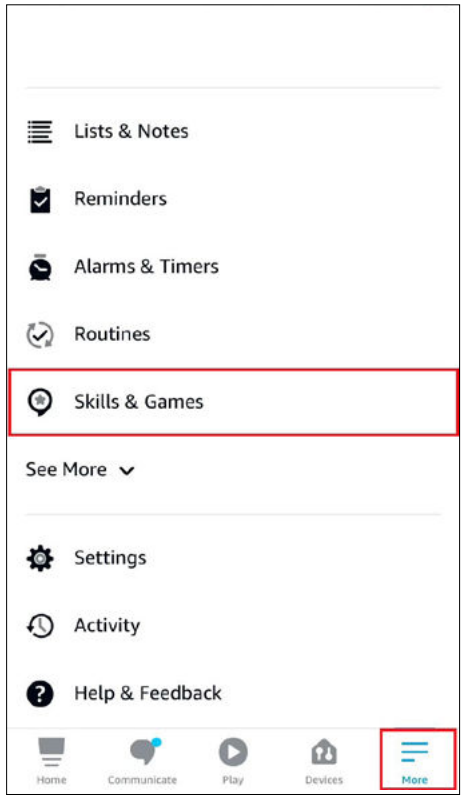

2. Enter Tapo in the search bar and choose Tapo.

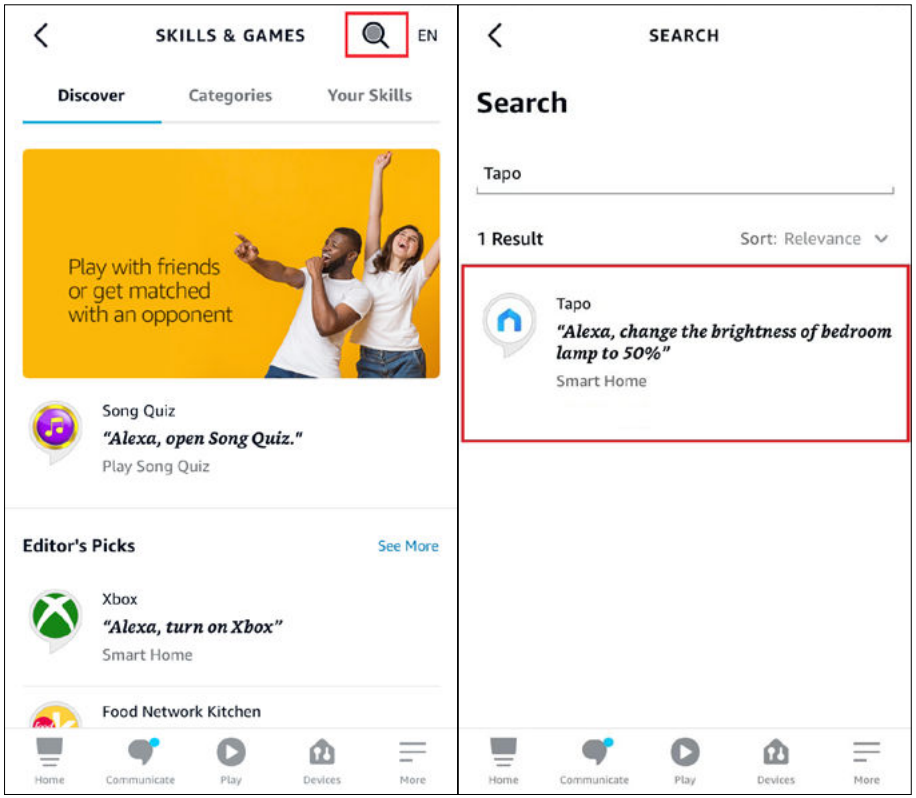

3. Tap the ENABLE TO USE button.

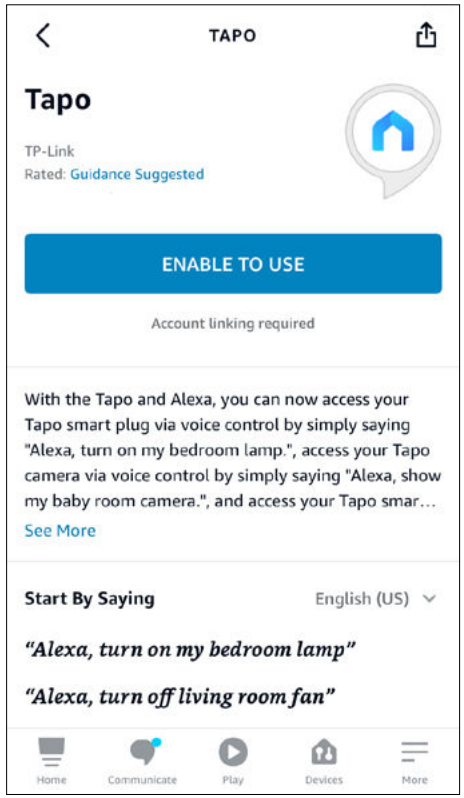

4. Log in with your TP-Link ID that has bound to your Tapo device, and tap Authorize. After authorized successfully, the message Tapo has been successfully linked will come up.

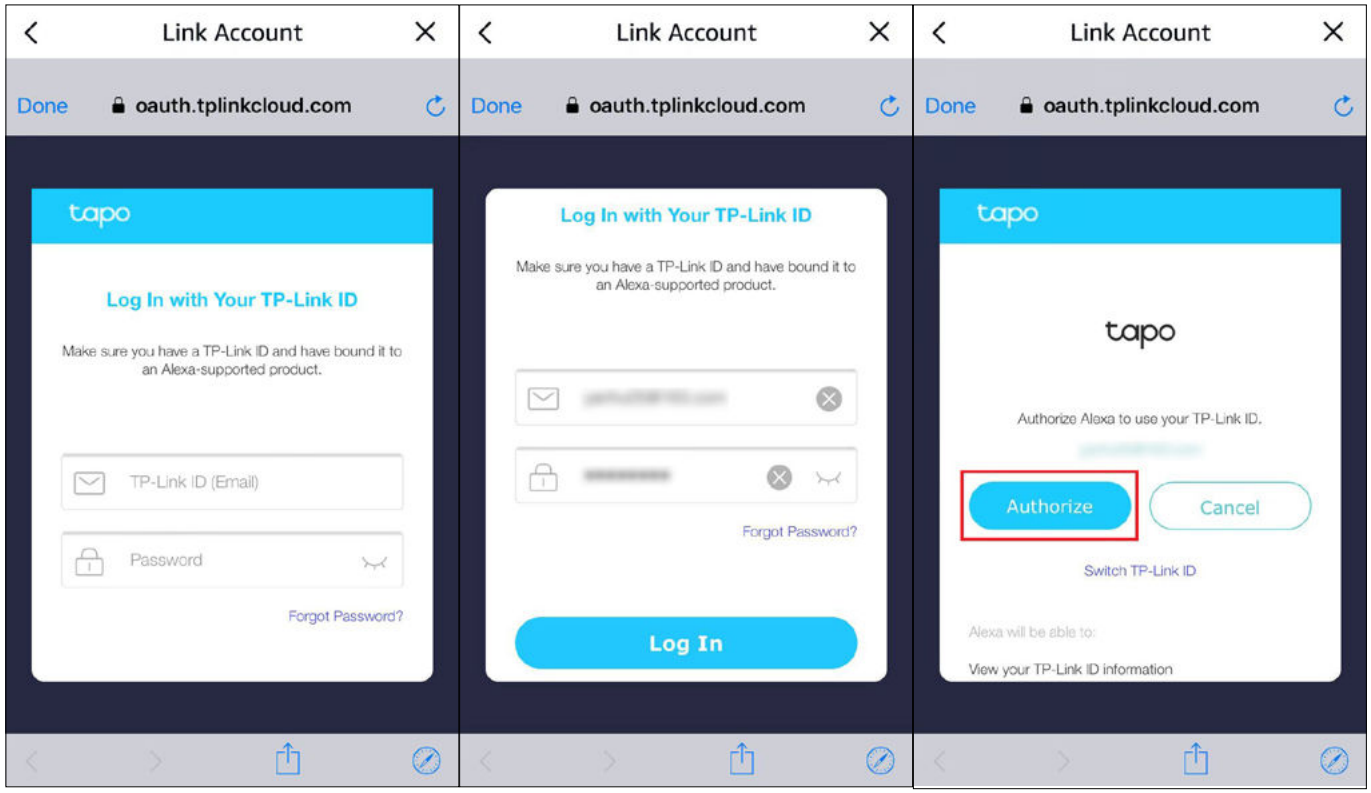

5. Plug in your Tapo device and the setup will complete automatically in two minutes.

For setting up more Tapo devices, just plug in and enjoy!

Done!

If this device displays on the Home page in the Tapo app, it indicates this device has been successfully associated with your Amazon account and joined your Wi-Fi network automatically.

If this device does not display on the Home page in the Tapo app, try setting it up manually. (Tap the + button on the page, select your device model, and then follow the app instructions.)

Mounting Tips - Camera

Read mounting tips before you mount the camera.

1. Avoid placing behind glass. Glass will obstruct the motion sensor of your camera.

2. Choose a proper location to mount your camera, or it will be triggered too often by false alarms.
- Avoid pointing the camera directly at swaying trees.
- Avoid pointing the camera directly at vehicles and pedestrians on the road.
- Avoid pointing the camera directly at street lamps and sunlight.

3. Mount your camera to the side so that movement goes across the len's field of view to better trigger motion detection and AI detection.

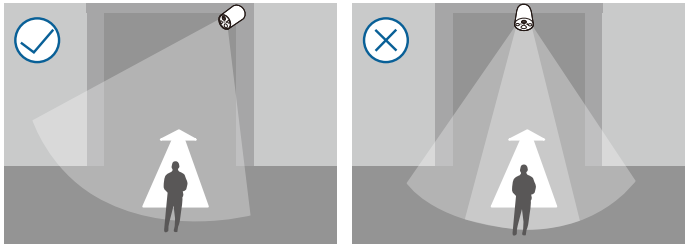

*Do not mount facing the direction of movement.

4. Tilt the camera downwards at an angle of about 15°.

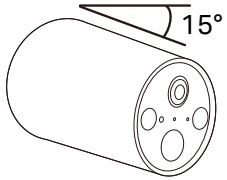

5. Do not place the camera upside down.

6. Keep the motion sensor level for best results.

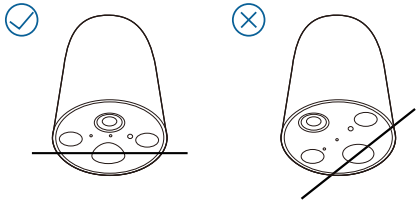

Mounting Tips - Solar Panel

Read mounting tips before you mount the solar panel.

The solar panel captures free, clean solar energy and provides non-stop power supply for your Tapo cameras. The position and tilt angle of the solar panel greatly affects the solar efficiency.

1. Choose a location where the solar panel gets the most sunlight throughout the year.

2. Position the panel south-facing in the Northern Hemisphere or north-facing in the Southern Hemisphere. The recommended tilt angle between the panel and the horizontal ground is 35° ~ 45°.

3. Regularly wipe the panel to remove dust and debris.

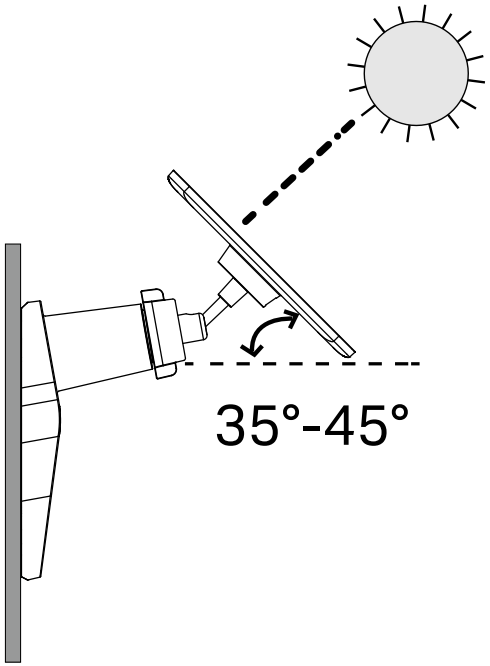

Mount Solar Panel and Camera KIT

The Tapo Solar Panel charges your Smart Wire-Free Indoor/Outdoor Security Camera continuously.
For the setup video, please refer to https://www.tp-link.com/support/setup-video/#cloud-cameras

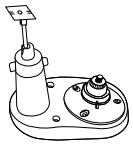

1. Drill Holes

Stick the mounting template to a solid and level wall surface. Drill three screw holes according to the template.

Φ=6 mm (15/64 in.)

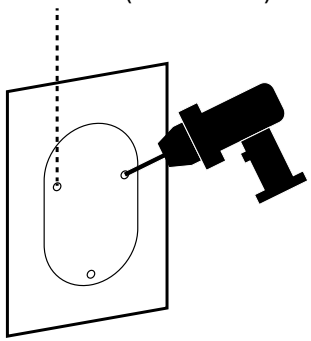

2. Mount Bracket

Insert three wall anchors into the holes and use the mounting screws to affix the solar panel bracket over the anchors. Then, insert two screw caps into the upper screw holes.

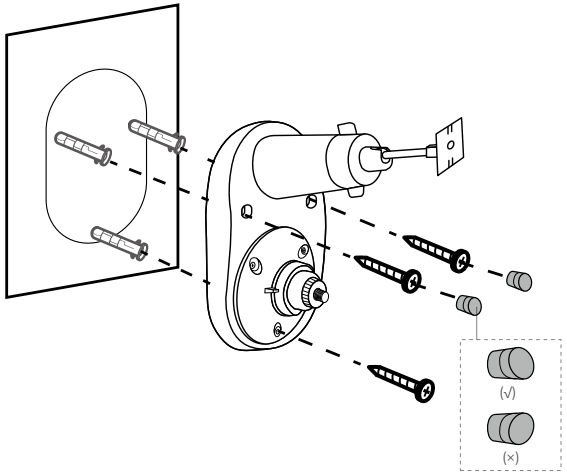

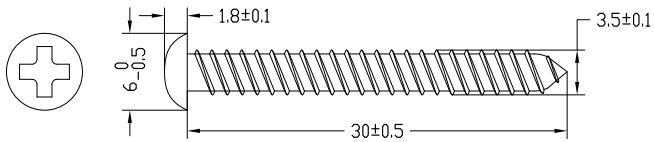

3. Install the Solar Panel

Slide the solar panel onto the mounting bracket until it clicks into place.

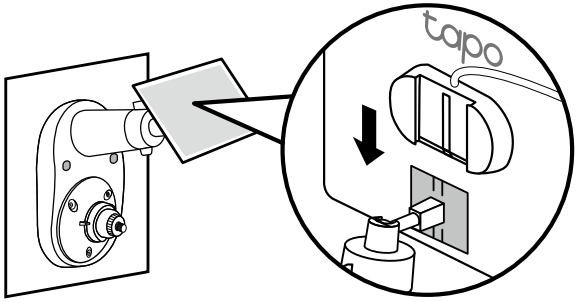

4. Adjust Solar Panel Angle

Loosen the adjustable screw, tilt the solar panel to adjust the angle, and then tighten the adjustable screw.

The recommended tilt angle between the panel and the horizontal ground is 35° ~ 45°.

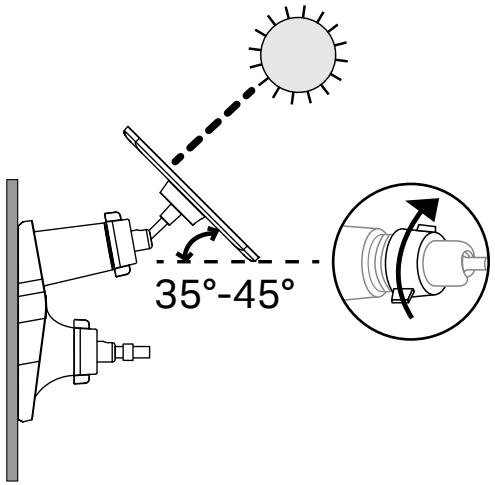

5. Install Camera & Adjust Angle

Install the camera onto the bracket and adjust the camera angle as per the camera's guide.

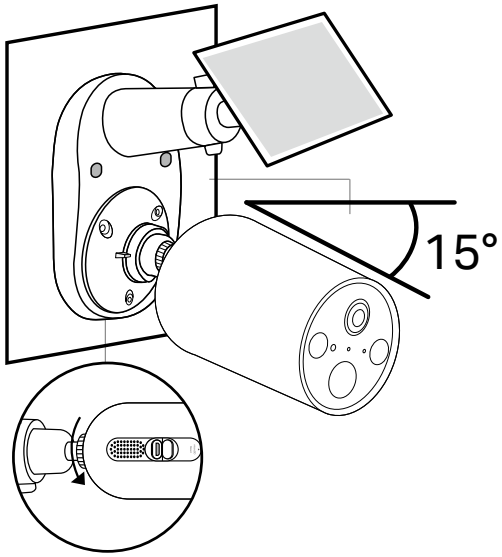

Ensure the camera is securely attached to the camera bracket by tightening the bottom screw.

6. Connect to the Camera

Insert the waterproof gasket into the camera's charging port. Ensure that the gasket is tightly sealed. Then, connect the solar panel to the camera.

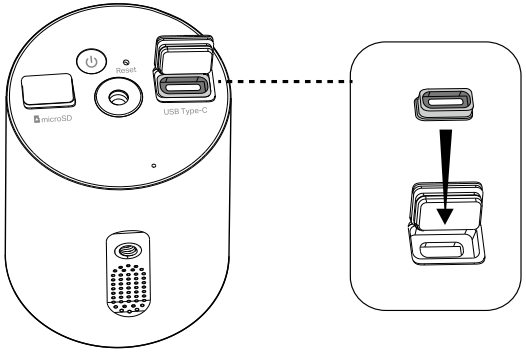

For detailed connection instructions, please refer to https://www.tp-link.com/support/faq/3800/

Mount Your Camera Only

To mount the camera individually, you can detach the camera bracket from the solar panel bracket and mount it to anywhere you want.
For the setup video, please refer to https://www.tp-link.com/support/setup-video/#cloud-cameras.

1. Drill Holes

Stick the mounting template to the desired mounting place. Drill 3 holes according to the template.

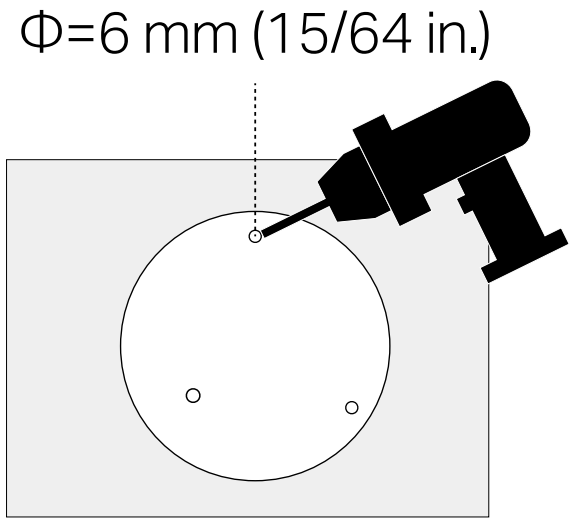

2. Install the Bracket

Insert three anchors into the holes and use the screws to affix the bracket over the anchors.

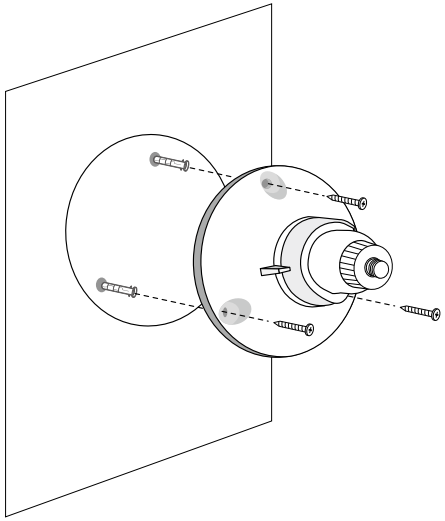

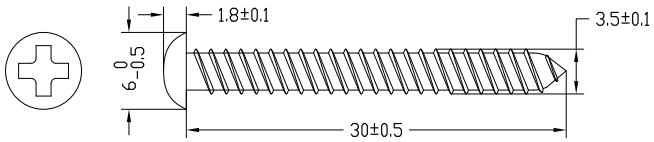

3. Install the Camera

Install the camera on the mounting bracket, and adjust the camera angle.

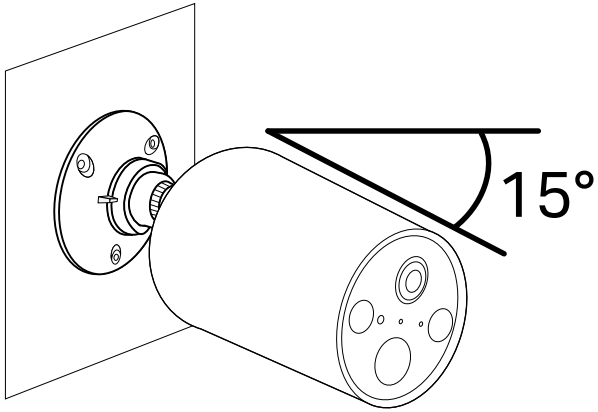

Authentication

FCC compliance information statement

Product Name: Solar-Powered Security Camera Kit
Model Number: Tapo C425 KIT/TC85 KIT
Responsible Party:
TP-Link USA Corporation
Address: 10 Mauchly, Irvine, CA 92618
Website: http://www.tp-link.com/us/
Tel: +1 626 333 0234
Fax: +1 909 527 6804
E-mail: sales.usa@tp-link.com

This equipment has been tested and found to comply with the limits for a Class B digital device, pursuant to part 15 of the FCC Rules. These limits are designed to provide reasonable protection against harmful interference in a residential installation. This equipment generates, uses and can radiate radio frequency energy and, if not installed and used in accordance with the instructions, may cause harmful interference to radio communications. However, there is no guarantee that interference will not occur in a particular installation. If this equipment does cause harmful interference to radio or television reception, which can be determined by turning the equipment off and on, the user is encouraged to try to correct the interference by one or more of the following measures:

- Reorient or relocate the receiving antenna.
- Increase the separation between the equipment and receiver.
- Connect the equipment into an outlet on a circuit different from that to which the receiver is connected.
- Consult the dealer or an experienced radio/ TV technician for help.

This device complies with part 15 of the FCC Rules. Operation is subject to the following two conditions:

1. This device may not cause harmful interference.
2. This device must accept any interference received, including interference that may cause undesired operation.

Any changes or modifications not expressly approved by the party responsible for compliance could void the user's authority to operate the equipment.

Note: The manufacturer is not responsible for any radio or TV interference caused by unauthorized modifications to this equipment. Such modifications could void the user's authority to operate the equipment.

FCC RF Radiation Exposure Statement

This equipment complies with FCC RF radiation exposure limits set forth for an uncontrolled environment. This device and its antenna must not be co-located or operating in conjunction with any other antenna or transmitter.

"To comply with FCC RF exposure compliance requirements, this grant is applicable to only Mobile Configurations. The antennas used for this transmitter must be installed to provide a separation distance of at least 20 cm from all persons and must not be co-located or operating in conjunction with any other antenna or transmitter."

We, **TP-Link USA Corporation**, has determined that the equipment shown as above has been shown to comply with the applicable technical standards, FCC part 15. There is no unauthorized change is made in the equipment and the equipment is properly maintained and operated.

Issue Date: 2024-04-25

CE Mark Warning

This is a class B product. In a domestic environment, this product may cause radio interference, in which case the user may be required to take adequate measures.

OPERATING FREQUENCY (the maximum transmitted power)

2412MHz—2472MHz (20dBm)

EU Declaration of Conformity

For Solar Panel:

TP-Link hereby declares that the device is in compliance with the essential requirements and other relevant provisions of directives 2014/30/EU, 2014/35/EU, 2011/65/EU and (EU)2015/863.

The original EU declaration of conformity may be found at https://www.tapo.com/en/support/ce/

For Camera:

TP-Link hereby declares that the device is in compliance with the essential requirements and other relevant provisions of directives 2014/53/EU, 2009/125/EC, 2011/65/EU and (EU)2015/863.

The original EU Declaration of Conformity may be found at https://www.tapo.com/en/support/ce/.

RF Exposure Information

This device meets the EU requirements (2014/53/EU Article 3.1a) on the limitation of exposure of the general public to electromagnetic fields by way of health protection.

The device complies with RF specifications when the device used at 20 cm from your body.

UKCA Mark

UK Declaration of Conformity

For Solar Panel:

TP-Link hereby declares that the device is in compliance with the essential requirements and other relevant provisions of the Electromagnetic Compatibility Regulations 2016 and Electrical Equipment (Safety) Regulations 2016.

The original UK declaration of conformity may be found at https://www.tapo.com/support/ukca/

For Camera:
TP-Link hereby declares that the device is in compliance with the essential requirements and other relevant provisions of the Radio Equipment Regulations 2017.

The original UK Declaration of Conformity may be found at https://www.tapo.com/support/ukca/.

Canadian Compliance Statement

This device contains licence-exempt transmitter(s)/receiver(s) that comply with Innovation, Science and Economic Development Canada's licence-exempt RSS(s). Operation is subject to the following two conditions:

1. This device may not cause interference.

2. This device must accept any interference, including interference that may cause undesired operation of the device.

L'émetteur/récepteur exempt de licence contenu dans le présent appareil est conforme aux CNR d'Innovation, Sciences et Développement économique Canada applicables aux appareils radio exempts de licence. L'exploitation est autorisée aux deux conditions suivantes :

1. l'appareil ne doit pas produire de brouillage;

2. l'utilisateur de l'appareil doit accepter tout brouillage radioélectrique subi, meme si le brouillage est susceptible d'en compromettre le fonctionnement

Radiation Exposure Statement:

This equipment complies with IC radiation exposure limits set forth for an uncontrolled environment. This equipment should be installed and operated with minimum distance 20cm between the radiator & your body.

Déclaration d'exposition aux radiations:

Cet équipement est conforme aux limites d'exposition aux rayonnements IC établies pour un environnement non contrôlé. Cet équipement doit être installé et utilisé avec un minimum de 20 cm de distance entre la source de rayonnement et votre corps.

Industry Canada Statement

CAN ICES-3 (B)/NMB-3(B)

FR
ÉLÉMENTS D'EMBALLAGE
À SÉPARER ET À DÉPOSER
DANS LE BAC DE TRI
BAC DE TRI

Korea Warning Statements:

당해 무선설비는 운용중 전파혼신 가능성이 있음.

NCC Notice & BSMI Notice

注意！

取得審驗證明之低功率射頻器材，非經核准，公司、商號或使用者均不得擅自變更頻率、加大功率或變更原設計之特性及功能。

低功率射頻器材之使用不得影響飛航安全及干擾合法通信；經發現有干擾現象時，應立即停用，並改善至無干擾時方得繼續使用。

前述合法通信，指依電信管理法規定作業之無線電通信。

低功率射頻器材須忍受合法通信或工業、科學及醫療用電波輻射性電機設備之干擾。

為避免本器材影像畫面遭偷窺或擷取，本器材使用者應先修改預設密碼，並定期更新密碼。

安全諮詢及注意事項

- 請使用原裝電源供應器或只能按照本產品注明的電源類型使用本產品。
- 清潔本產品之前請先拔掉電源線。請勿使用液體、噴霧清潔劑或濕布進行清潔。
- 注意防潮，請勿將水或其他液體潑灑到本產品上。
- 插槽與開口供通風使用，以確保本產品的操作可靠並防止過熱，請勿堵塞或覆蓋開口。
- 請勿將本產品置放於靠近熱源的地方。除非有正常的通風，否則不可放在密閉位置中。
- 不要私自拆開機殼或自行維修，如產品有故障請與原廠或代理商聯繫。
- 電源供應器应使用在环境温度低於或等於40°C的室內。

限用物質含有情況標示聲明書

設備名稱：Solar-Powered Security Camera Kit Equipment name	型號（型式）：Tapo C425 KIT/TC85 KIT Type designation (Type)

單元 Unit	限用物質及其化學符號 Restricted substances and its chemical symbols					
	鉛 Lead (Pb)	汞 Mercury (Hg)	鎘 Cadmium (Cd)	六價鉻 Hexavalent chromium (Cr^{+6})	多溴聯苯 Polybrominated biphenyls (PBB)	多溴二苯醚 Polybrominated diphenyl ethers (PBDE)
PCB	○	○	○	○	○	○
外殼	○	○	○	○	○	○
電源供應器	—	○	○	○	○	○
其他及其配件	—	○	○	○	○	○

備考 1.〝超出 0.1 wt %〞及〝超出 0.01 wt %〞係指限用物質之百分比含量超出百分比含量基準值

Note 1: "Exceeding 0.1 wt %" and "exceeding 0.01 wt %" indicate that the percentage content of the restricted substance exceeds the reference percentage value of presence condition.

備考 2.〝○〞係指該項限用物質之百分比含量未超出百分比含量基準值。

Note 2: "○" indicates that the percentage content of the restricted substance does not exceed the percentage of reference value of presence.

備考 3.〝—〞係指該項限用物質為排除項目。

Note 3: The "—" indicates that the restricted substance corresponds to the exemption.

Продукт сертифіковано згідно с правилами системи УкрСЕПРО на відповідність вимогам нормативних документів та вимогам, що передбачені чинними законодавчими актами України.

EAC

Safety Information

- Do not use damaged charger or USB cable to charge the device.
- Do not use any other chargers than those recommended.
- Do not use the device where wireless devices are not allowed.
- Adapter shall be easily accessible.
- Use only power supplies which are provided by manufacturer and in the original packing of this product. If you have any questions, please don't hesitate to contact us.
- Keep the device away from fire or hot environments. DO NOT immerse in water or any other liquid.
- Do not disassemble, repair or modify the product.
- Do not place near automatically controlled devices such as fire alarms. Radio waves emitted from this product may cause such devices to malfunction resulting in an accident.
- Observe restrictions on using wireless products in fuel depots, chemical plants or when blasting operations are in progress.
- Do not use liquid to clean the product. Only use a dry cloth.
- Never put metal objects inside the product. If a metal object enters the product turn off the circuit breaker and contact an authorised electrician.
- This product is not intended to be used when providing medical care. Consult the manufacturer of any personal medical devices, such as pacemakers or hearing aids to determine if they are adequality shielded from external RF (radio frequency) energy.
- Do not use this product in health care facilities. Hospitals or health care facilities may be using equipment that could be sensitive to external RF energy.
- Do not place heavy objects on top of the product.
- When you leave the product unused for a long time unplug the product from the power outlet.
- This product may interfere with other electronic products such as TV, radios, personal computers, phones or other wireless devices.
- Operating Temperature: -20°C ~ 45°C (-4°F ~ 113°F)
- When mounting the camera with the magnetic base, we recommend installing it no higher than 2 meters.
- Adapter should be used indoors where the ambient temperatureis lower than or equal to 40°C.

CAUTION!

Avoid replacement of a battery with an incorrect type that can defeat a safeguard.

Avoid disposal of a battery into fire or a hot oven, or mechanically crushing or cutting of a battery, that can result in an explosion.

Do not leave a battery in an extremely high temperature surrounding environment that can result in an explosion or the leakage of flammable liquid or gas; Do not leave a battery subjected to extremely low air pressure that may result in an explosion or the leakage of flammable liquid or gas.

Please read and follow the above safety information when operating the device. We cannot guarantee that no accidents or damage will occur due to improper use of the device. Please use this product with care and operate at your own risk.

Explanation of the symbols on the product label

Note: Symbols may vary from products.

Symbol	Explanation
	Class II equipment
	Class II equipment with functional earthing
	Alternating current
	DC voltage
	Polarity of output terminals
	Indoor use only
	Dangerous voltage
	Caution, risk of electric shock
	Energy efficiency Marking
	Protective earth
	Earth
	Frame or chassis

Symbol	Explanation
	Functional earthing
	Caution, hot surface
	Caution
	Operator's manual
	Stand-by
	"ON"/"OFF" (push-push)
	Fuse
N	Fuse is used in neutral N
	RECYCLING This product bears the selective sorting symbol for Waste electrical and electronic equipment (WEEE). This means that this product must be handled pursuant to European directive 2012/19/EU in order to be recycled or dismantled to minimize its impact on the environment. User has the choice to give his product to a competent recycling organization or to the retailer when he buys a new electrical or electronic equipment.
	Caution, avoid listening at high volume levels for long periods
	Disconnection, all power plugs

Symbol	Explanation
m	Switch of mini-gap construction
μ	Switch of micro-gap construction (for US version) Switch of micro-gap / micro-disconnection construction (for other versions except US)
ε	Switch without contact gap (Semiconductor switching device)